Orbit Design for orbit propagator

Abstract

Visualization of the orbit motion *of* a satellite in space is an important step to carryout mission planning and design. In an environment of learning such visualization tools help the students to understand and appreciate the dynamical motion. The purpose of this study was to present, first, the simulation of the satellite orbit analysis based on data collected from NASA/Nord two-line element files. The analysis includes orbit determination and prediction of satellite position/velocity, orbit eclipse and ground trace and so on. Second the application of this simulation to design the Low Earth Orbit (LEO) satellite power subsystem. The intention of this simulation was to create a Graphical User Interface (GUI) which consists of menus, push buttons, text boxes, plots and other interface devices that allow the GUI user to immediately see the impact of various changes.

Project Overview

Propagator is a model whose objective is to determine the position of satellite at any instance of time, with given acceleration and initial velocity. If we assume the earth is spherical and only earth's gravitational field is affecting satellite motion then the problem would be easy to solve but the issue arises when other factors like earth oblateness, gravitational force from moon and sun, atmospheric drag and solar pressure come into play.

There are some factors which affect the propagation more than others. For example, a satellite which is orbiting around earth will be greatly affected by earth's oblateness rather than gravitational field of sun and moon (as they are very far away). As the number of the factor considered in the model increase, the complexity of the model increases.

To get more accurate model, one needs to account for many factors, but they come at the cost of computational time and power. A satellite completely depending on the model will demand more accuracy than a satellite using the model but correcting its position from time to time using a GPS. There are following models available as per the application and accuracy, some of them are listed here.

Assume there are only two bodies in space, one is earth and other is your satellite and only gravitational force acting between these two.

To track satellites through space, it is needed to know where they are now and where they'll be later so that sensor coverage can be predicted and are pointed antennas at them to gather data.

$$F = \frac{GMm}{r^2}$$

$$g(r) = \frac{GM}{(r+h)^2}$$

Although we can easily predict this motion when the orbit is a circle, the problem becomes more complicated when the orbit is an ellipse, and most orbits are at least slightly elliptical. An orbit propagator is a mathematical algorithm for predicting the future position and velocity (or orbital elements) of an orbit given some initial conditions and assumptions.

After computing the orbit, the data can be used to generate a best-estimate history of where the satellite was (definitive orbit) and where it will (predicted orbit), along with the associated speed and direction (velocity) at each point. The definitive orbit, being the most accurate available, is used by the experimenters in processing and interpreting scientific data. The predicted orbit is used to produce scheduling aids. Scheduling aids indicate spacecraft environmental conditions (such as sun or shadow, interference regions and altitude) as well as all potential station-to-station contact times (view periods). Using this list of environmental conditions, the experimenter can plan scientific data collection and knowing the station view periods, can select the times needed to meet mission communications requirements.

Effect of period: As the period of an orbit increase, the satellite's altitude increases covering less ground in each amount of time. There are trade-offs made between the altitude of different orbits. A lower altitude orbit provides for improved resolution and global coverage in a single day (inclination dependent). A higher altitude orbit provides for longer continuous access to a single point on the surface of the earth.

The aim of the study presented is to give a real time simulation, which provides support for model development and integration, simulation execution and analysis of results.

In order to achieve these missions it is therefore, essential to determine and predict an accurate orbit of a satellite. The study given is the orbit simulation which is a starting point for the simulation of future, hopefully real, spacecraft. The reason for doing this simulation was to give a visual insight into satellite orbits, by producing an animation of the satellite orbiting and also allowing a level of interaction, it lets the user gain a better understanding of satellite orbits. By changing different parameters, the user is able to observe how it affect the shape and position of the satellite orbit. Power generation and energy storage are the two main components of the power system. Consideration towards both systems should be done concurrently during the design phase. The advantages and disadvantages of both the power generation and energy storage methods must both be considered together in order to arrive at an optimal design. The results out of the simulation were compared and tested with real tracking algorithm, it was shown that the compared program can then generate same track shape and the same eclipse time duration.

Project Requirements

- Python.
- LabVIEW.

For Mathematical Calculations we use **"Orbit Equation".**

$$r = \frac{h^2}{\mu} * \frac{1}{1 + e\cos\theta}$$

μ and h are Constant

e is eccentricity

Since the orbit equation describes conic sections, including ellipses, it is a mathematical statement of Kepler's first law, namely, that the planets follow elliptical paths around the sun. Two-body orbits are often referred to as Keplerian orbits.

$$V_c = \sqrt{\frac{\mu}{R}}$$

-Circular Orbit Velocity.

$$V_E = \sqrt{\left(\frac{2\mu}{R} - \frac{\mu}{a}\right)}$$

-Elliptical Orbit Velocity.

This shows that the specific energy is independent of the eccentricity and depends only on the semimajor axis of the ellipse. For an elliptical orbit, the conservation of energy.

$$\frac{V^2}{2} \quad \frac{\mu}{r} \qquad \frac{\mu}{2a}$$

Tasks

We use Python to make a propagator to know r and v of satellite at any time chosen ODE solver needs three inputs to run: the function to be numerically integrated, an initial condition, and a time array. We already created the function, called model_2BP. The initial conditions can be anything (make sure you are outside of the Earth's surface!). NASA has an app that can be used to pull state vectors if you want to look at a particular satellite's orbit. The time array can be created using the *NumPy* package (Note: make sure you include enough time steps to create a smooth orbit). We can run the solver now and set it equal to sol (meaning "solution").

Python Code

```python
import numpy as np
import pandas as pd
from math import *


def pos_vel(tleFile):
    tle_file = tleFile
    tle = open(tle_file, 'r')
    L_Name = []
    L_1 = []
    L_2 = []
    i = 1
    for line in tle:
        j = i
        if i == 1:

            L_Name.append(line)
            j = 2
        elif i == 2:
            L_1.append(line.split( ))
            j = 3
        elif i == 3:
            L_2.append(line.split( ))
```

```
            L_2.append(line.split( ))
            j = 1
        i = j
    mu = 398600   #Km3/s2

    # inclination
    inc = L_2[0][2]   # 86.4015

    # Right Ascension of Ascending Node
    RAAN = L_2[0][3]   # 210.7285

    #Eccentricity
    e = float("0." + L_2[0][4])  # 0.0002010
    #e = float("0." + (L_2[0][4])[3:])  # 0.0002010

    #Argument of  perigee
    arg = L_2[0][5]  # 81.1725

    #Mean Anomaly  2pi * t / T
    M = float(L_2[0][6]) * (np.pi / 180)   # 278.9699 deg   # 4.6697697853802405 rad

    #Mean Motion 2pi/T
    n = L_2[0][7]   # 14.34586335336962

    #Period of Sat
    T = float(2 * np.pi / float(n)) * 60 * 60  #Second

    #Semi Major Axis root3 (mu / n^2)
    a3 = T ** 2 * mu / 4 * pow(np.pi, 2)
    a = float((a3 ** (1. / 3)))   # 13471.919188088554

    #time t = M * T / 2 * pi
    # t1 = float((float(M) * T) / (2 * np.pi )/ 60 / 60)    # 11566.287107644772 s
    t = float((M / float(n)) * 60 * 60)   # 1171.9099000936799 s

    # Position of Satellite
    r = float(a * (1 - pow(e, 2)) / (1 + e))

    # velocity (mu * 2 / r -- 1 / a) ** 0.5
    v = float(pow(mu * ((2 / r) - (1 / a)), (1 / 2)))

    print("Position is " , r)
    print("Velocity is " , v)


pos_vel("tle1.txt")
```

The two-line elements

```
IRIDIUM 7 [-]
1 24793U 97020B   22184.75439637  .00000161  00000-0  50135-4 0  9990
2 24793  86.3962 268.7095 0002403  92.5890 267.5581 14.34510556317087
```

LabVIEW

LabView that we make interface to monitor the data and the movement of the satellite. Type propagation is an analysis step in the LabVIEW compilation process that resolves data types for terminals that adapt to different data types and detects syntax errors. This step runs each time you edit a VI.

For example, if you wire an integer to the input of the Decrement function, the data type of the output is an integer. If you wire a floating-point number to the input, the output is a floating-point number. The same pattern exists for arrays and clusters. This behaviour of determining the output data type based on the input data type through the block diagram is called type propagation. If you wire an Enum to the input of the Decrement function, the type fails to propagate through the block diagram and the VI reports a syntax error because decrementing an Enum is not a legal operation for this function.

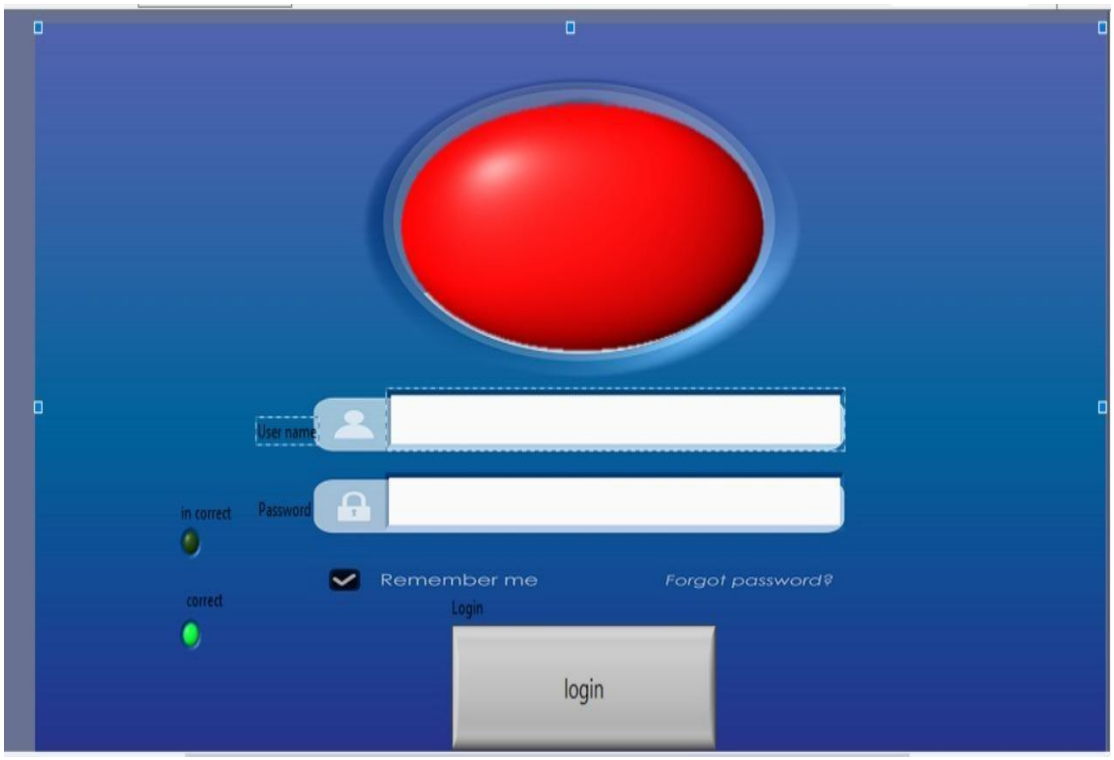

Here, this is the login page. When we enter the username and password, the program will move to the second page.

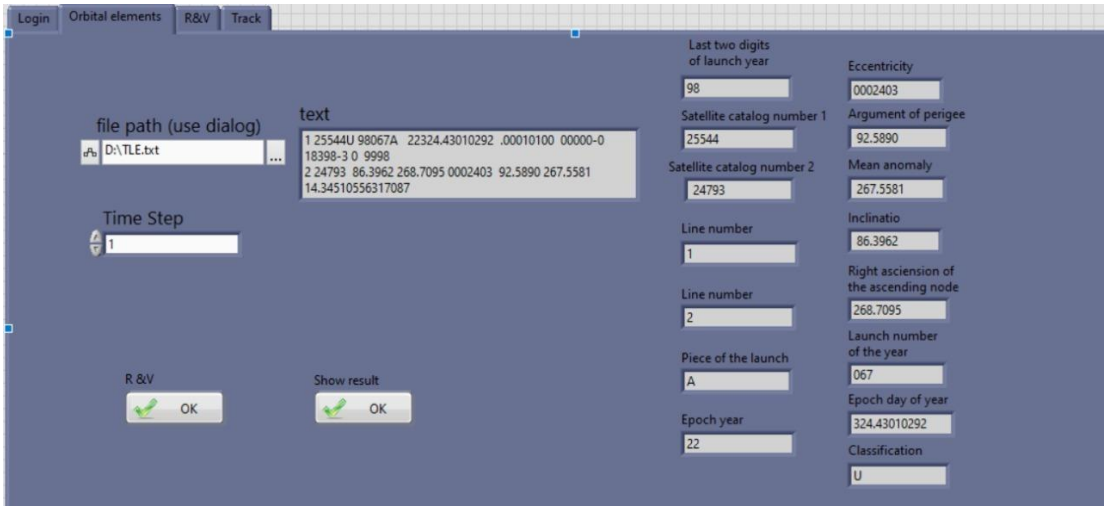

Here we used the file path that contains it the two-line element, and as soon as we enter the file, all the elements will appear to the user, and then we will move to the next page.

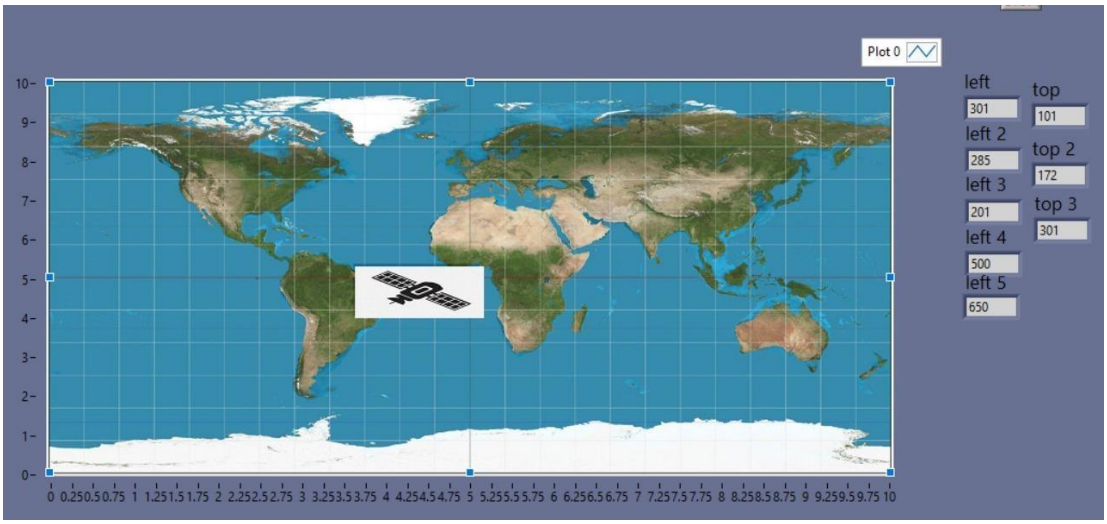

This is the track for a specific position.

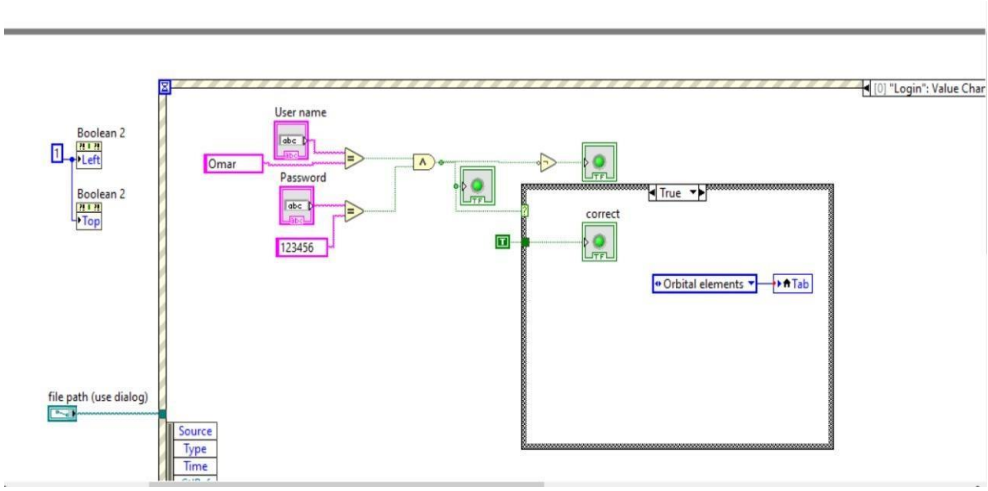

This is the code of login page

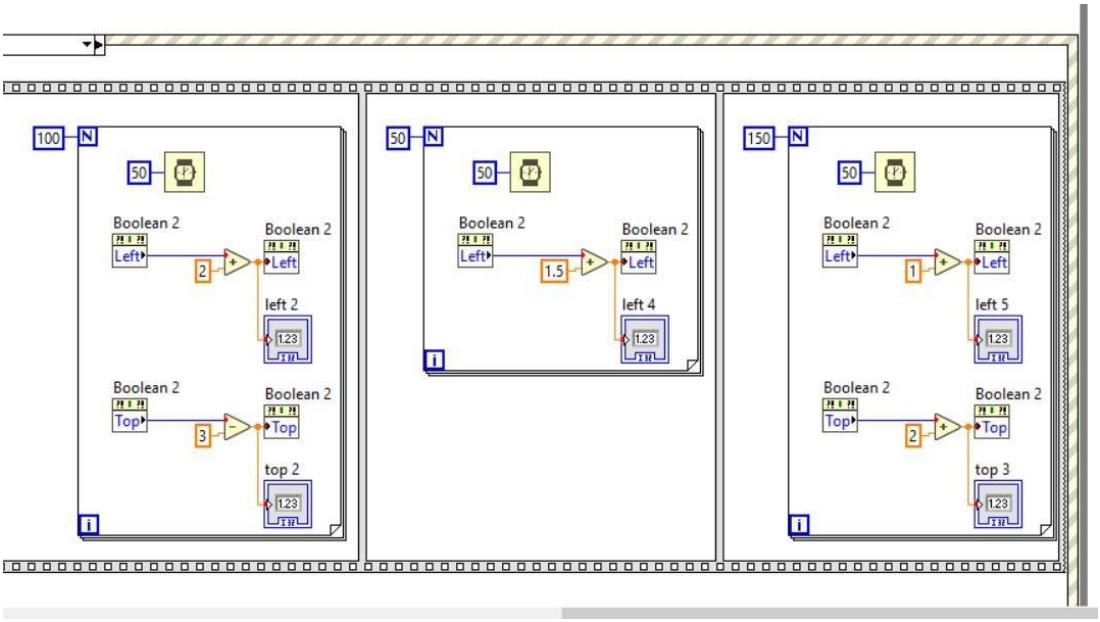

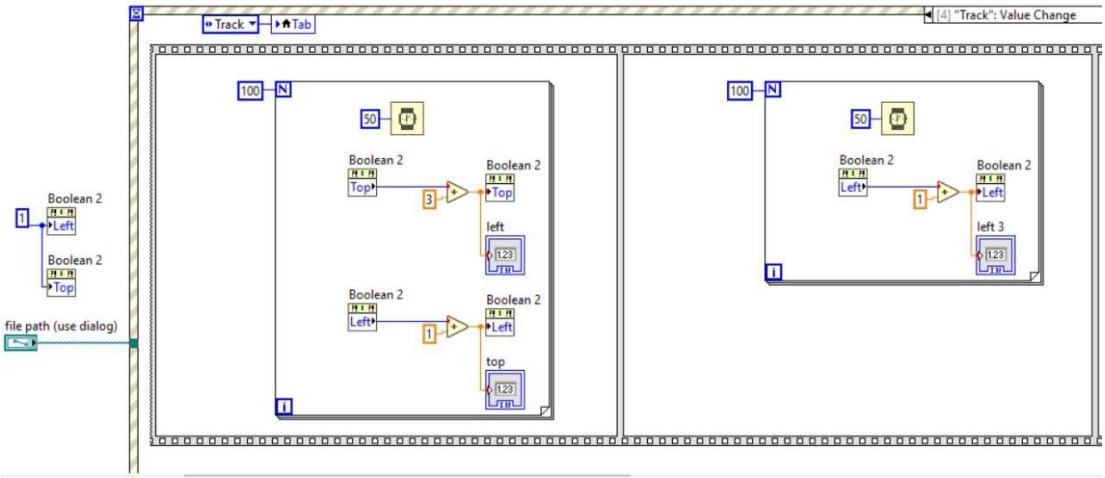
Track
Tab
[4] "Track": Value Change
100
50
Boolean 2
Top
3
left
Left
1
top
left 3
file path (use dialog)